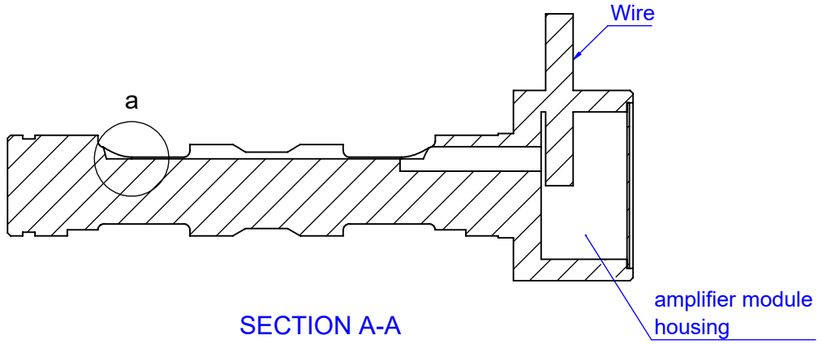

SECTION A-A

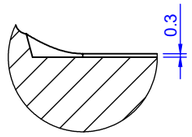

DETAIL a

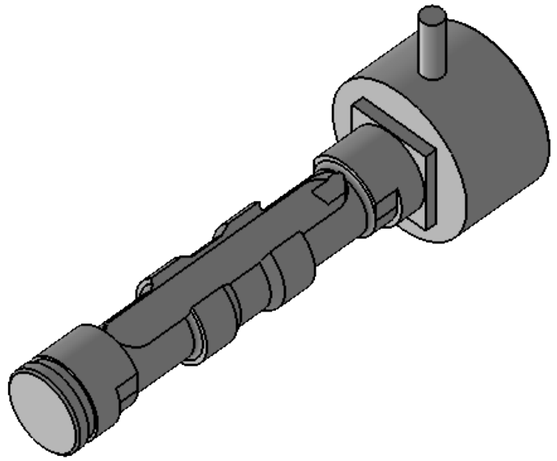

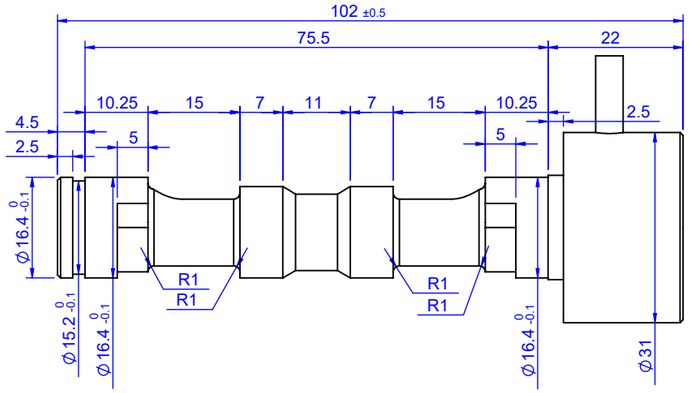

Output vs Load Transfer Function Normal Operation

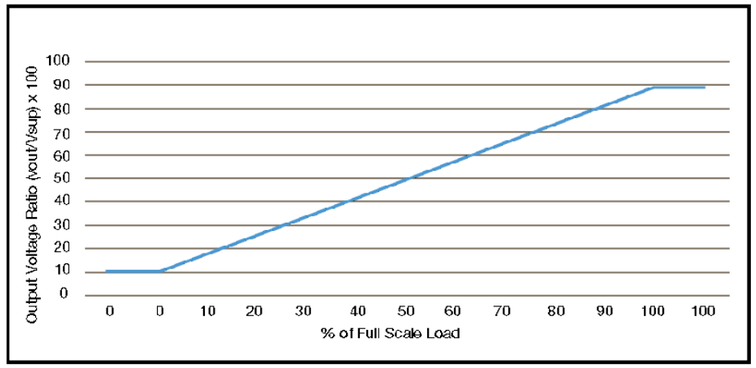

Connector

Connector	Pin	Wire Color	Function
Deutsch DTM04-3P	1	Red	Supply
	2	Black	Ground
	3	White	Signal

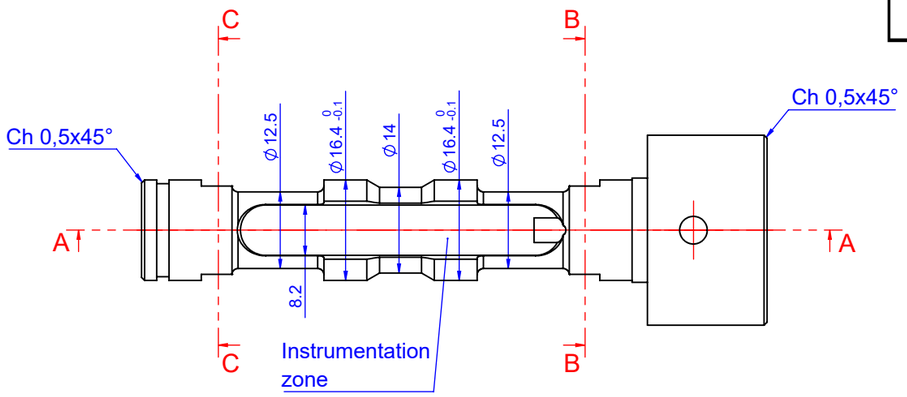

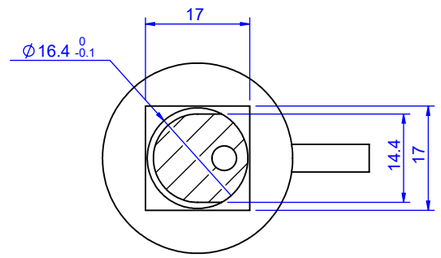

SECTION B-B

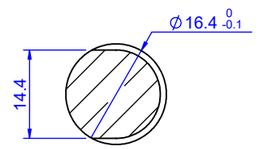

SECTION C-C

(TODAS LAS DIMENSIONES EN MILÍMETROS A MENOS QUE SE INDIQUE LO CONTRARIO)/(ALL DIMENSIONS ARE IN MILLIMETERS EXCEPT WHERE NOTED OTHERWISE)

NOTAS/NOTES:

- Load capacity: 1 Tn
- Output: 0 Kg -- 0,5 V
  675 Kg -- 4,5 V
- Powe source: 5 Vcc

Rev/Review	Descripción del cambio/Change Description	Dib/Made	Apr./Approval	Fecha/Date

OBSERV/OBSERVATIONS

Tolerances(unless otherwise noted)

Without Decimal	X. ±0.1
One Decimal	X.X ±0.05
Two Decimal	X.XX ±0.02
Angles	±0.5°

B&P motionsolutions

Sensor de carga

PLANO PRODUCCIÓN/FACTORY PRINT

Código/Code:	TSG-CC0-0070014	
	Fecha/Date	Nombre/Name
Dibujó/Made	02/10/2024	T.COLACILLI
Apr/Approved	01/02/2023	L.COCHIS
Rev/Review PO		
Escala/Scale:		
Mat/Material: Ver NOTAS/See NOTES		
Trat. Térmico/ Heat treatment:	Ver NOTAS/See NOTES	
Rugosidad/ Roughness	Revisión/Review	
Rev rótulo/Review label B	Fecha/Date	14/02/2022